Assembly Instruction For TG-2012

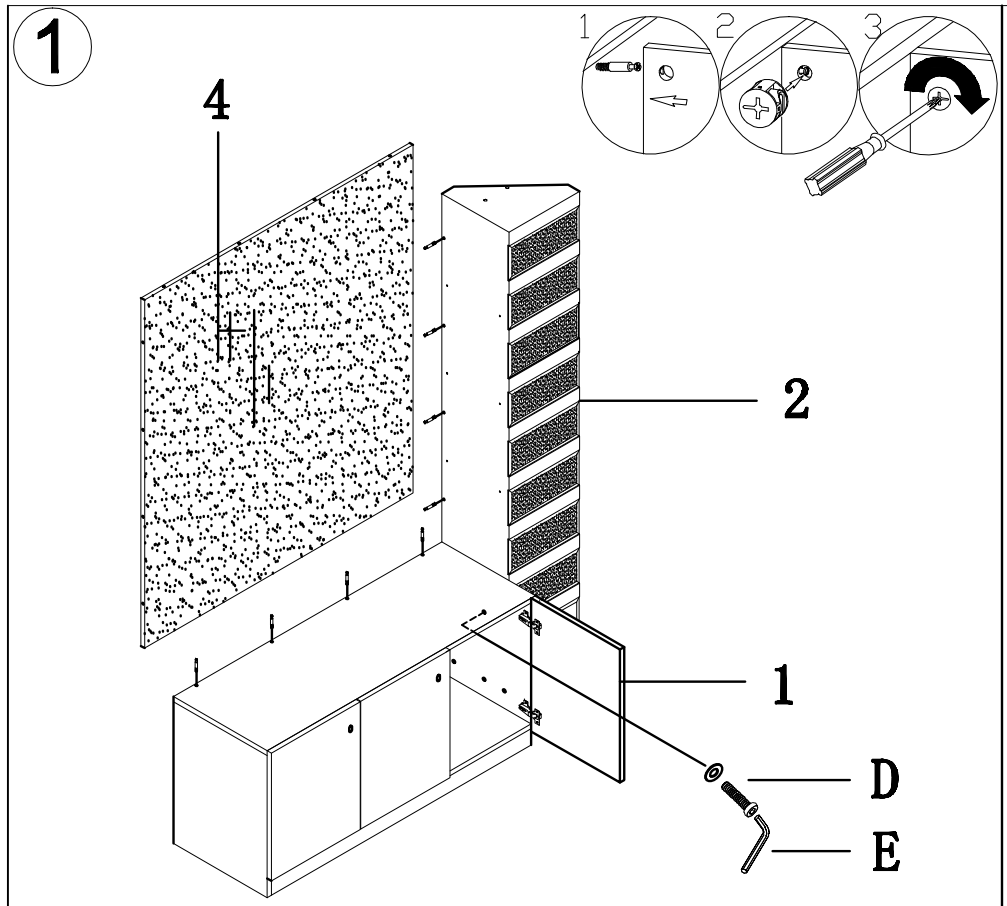

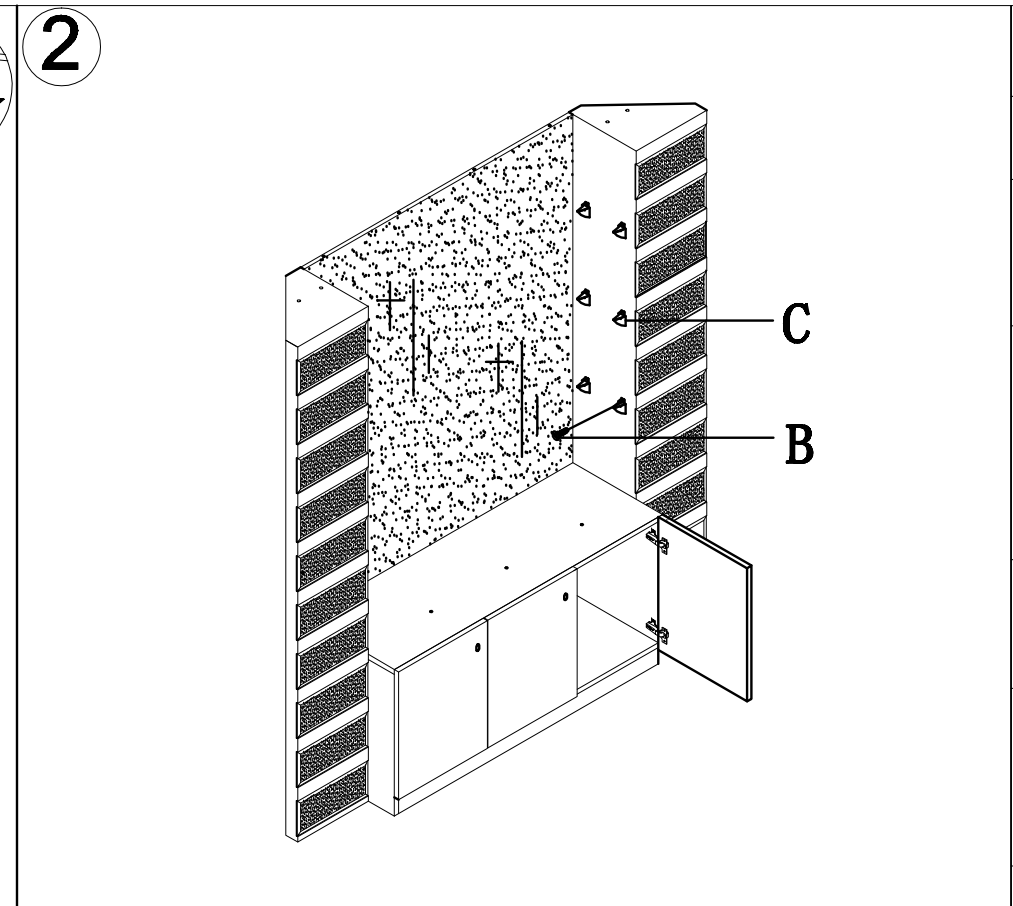

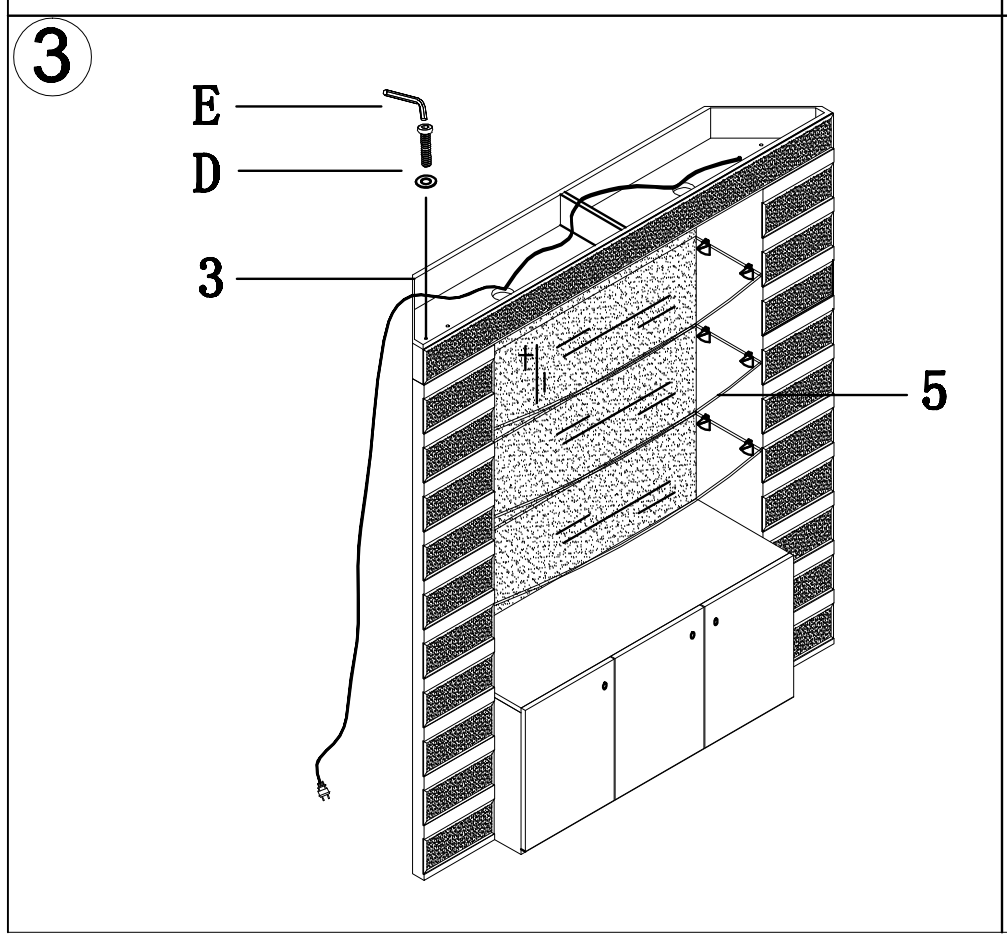

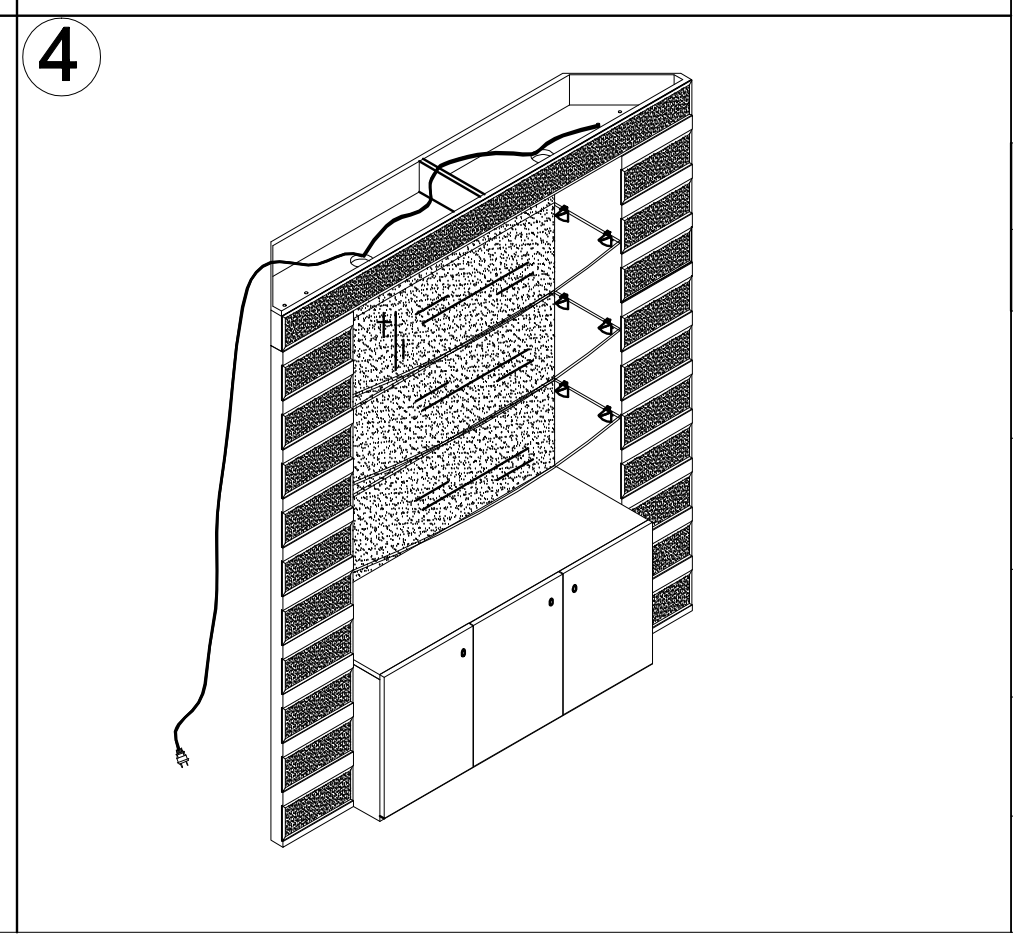

PARTS LIST

NO.	DESCRIPTION	QTY
1		1
2		1
3		1
4		1
5		3

HARDWARE LIST

NO.	DESCRIPTION	Q.T.Y
A	M6*32	16
B	M4*15	12
C		12
D	M8*35	12
E		1