44 National Road
Edison, NJ 08817
www.jnmfurniture.biz

SKU: 178543-MTV

CE Elm Mini TV Base

Inspired by our bestselling Elm modern dining collection, this TV unit is sure to speak volumes in any decor. Finished in a luxurious walnut matte finish, and juxtaposed with thick resilient tempered glass for a clean, attractive look. This TV Unit is available in two sizes for convenience and features plenty of shelf space for all your needs.

SKU: 178543-MTV Detailed Dimensions

CE Elm Mini TV Base

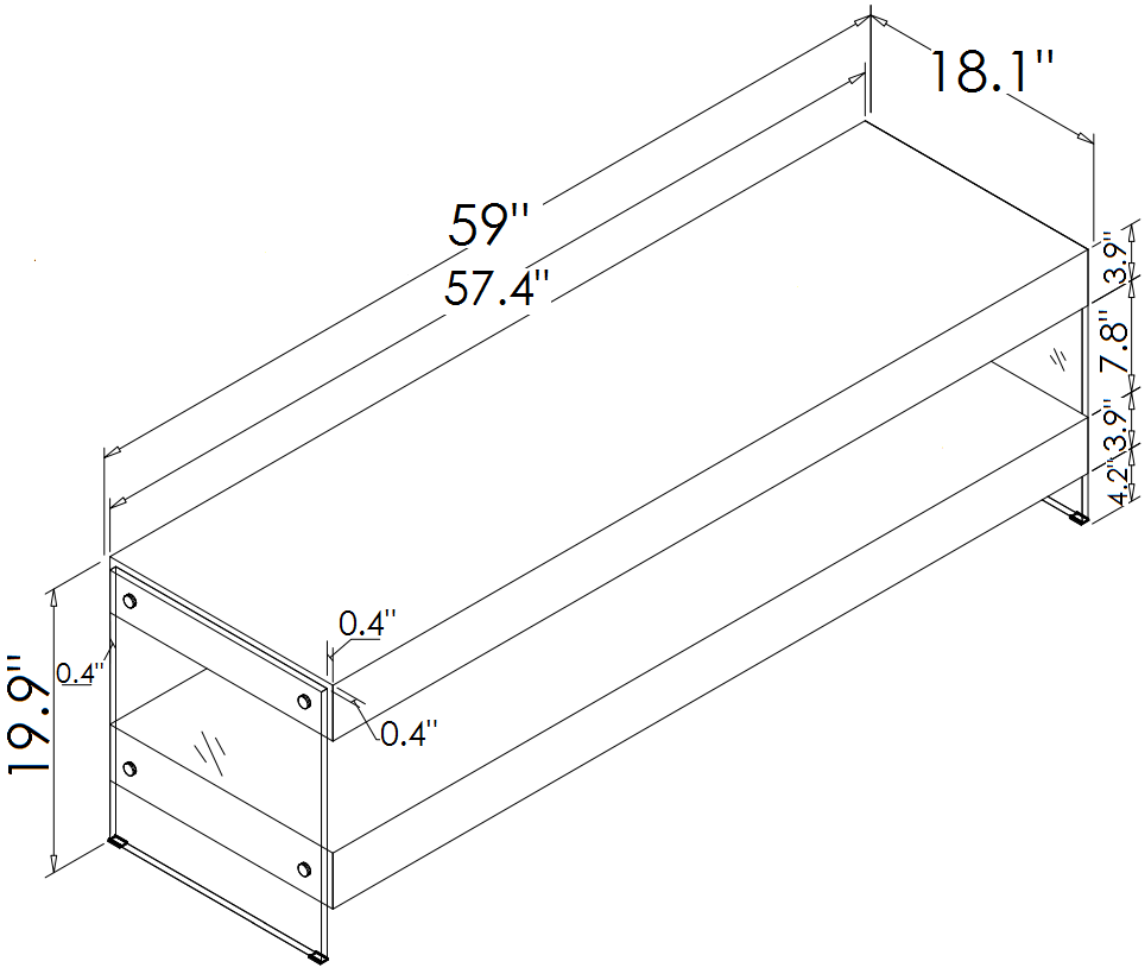

Assembly Instructions

CP1110TV11

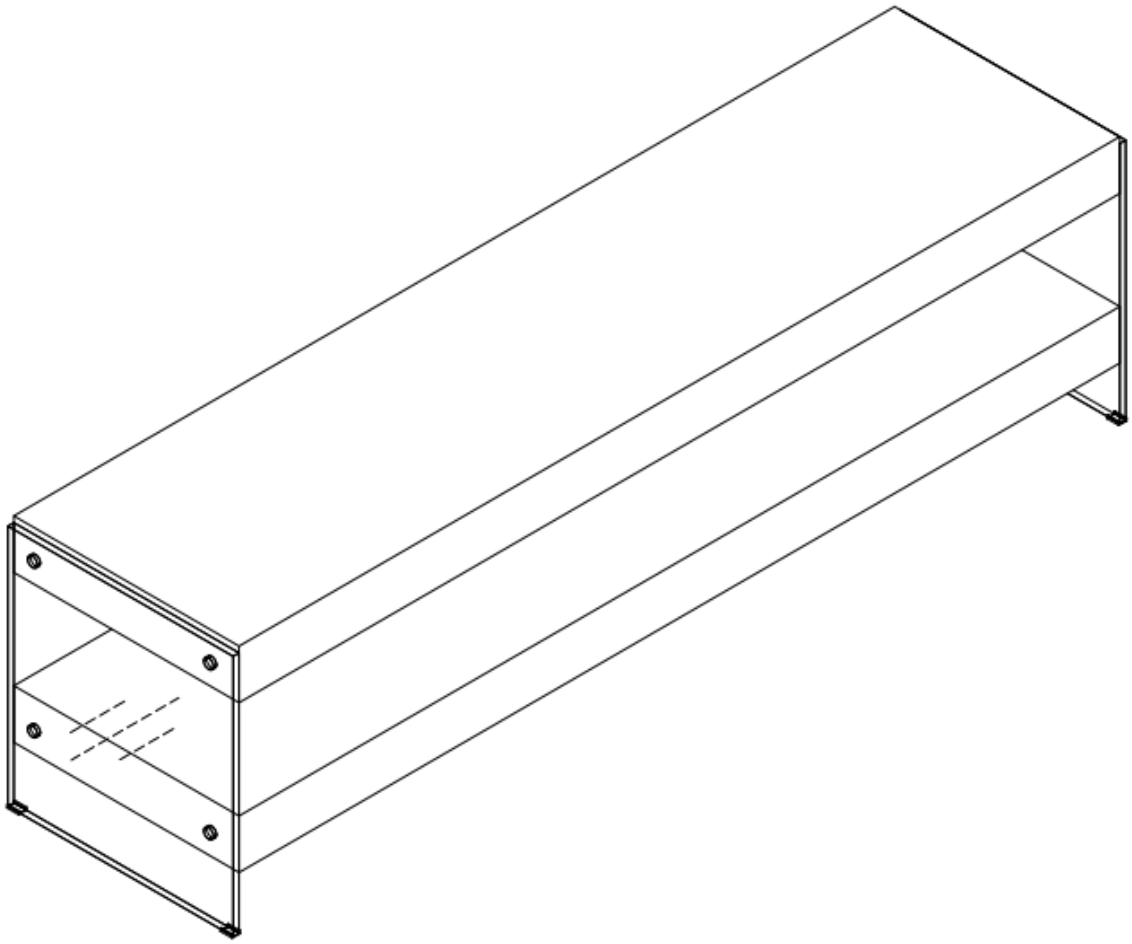

CP1110TV11

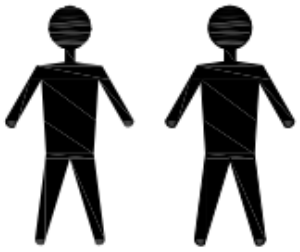

A x8
Spec:φ8*44

B x8
Spec:φ25*8

C x8
Spec:φ10*18

D x8
Spec:φ12*φ10*11

E x1
Spec:5#

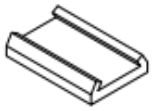

F x4
Spec:

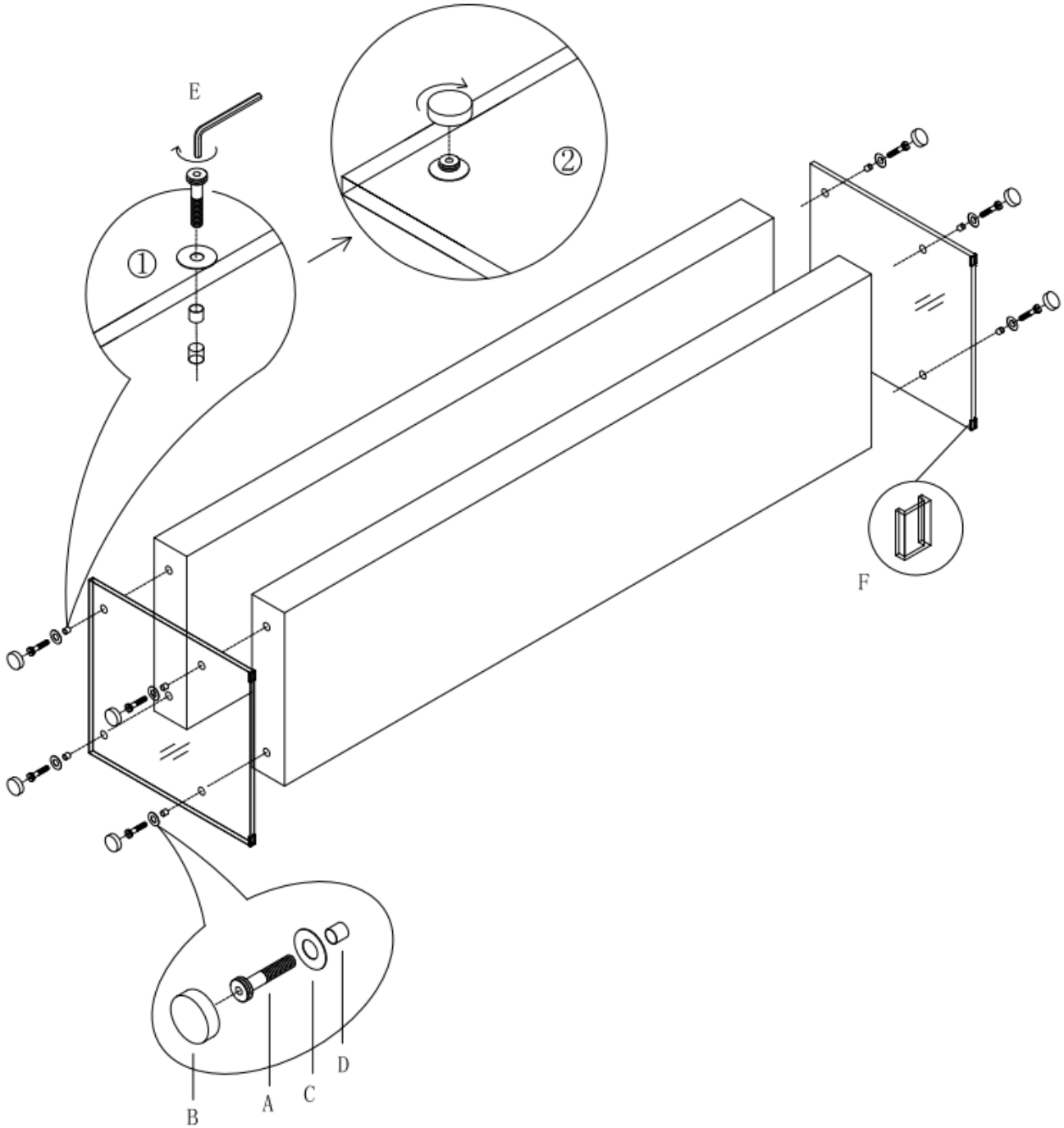
E
①
②
F
B
A
C
D