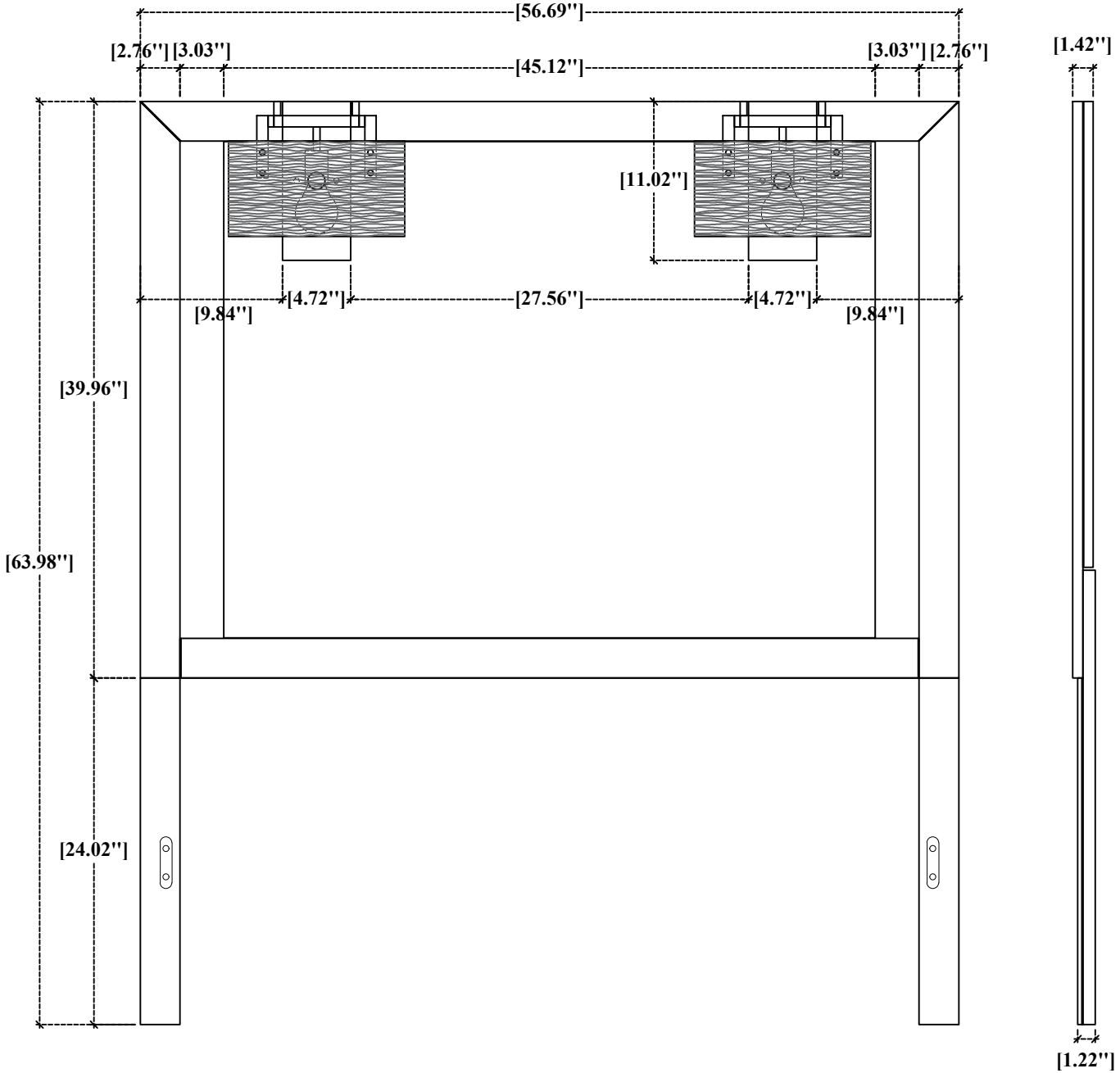
[56.69"]
[2.76"]
[3.03"]
[45.12"]
[3.03"]
[2.76"]
[1.42"]
[11.02"]
[9.84"]
[4.72"]
[27.56"]
[4.72"]
[9.84"]
[39.96"]
[63.98"]
[24.02"]
[1.22"]

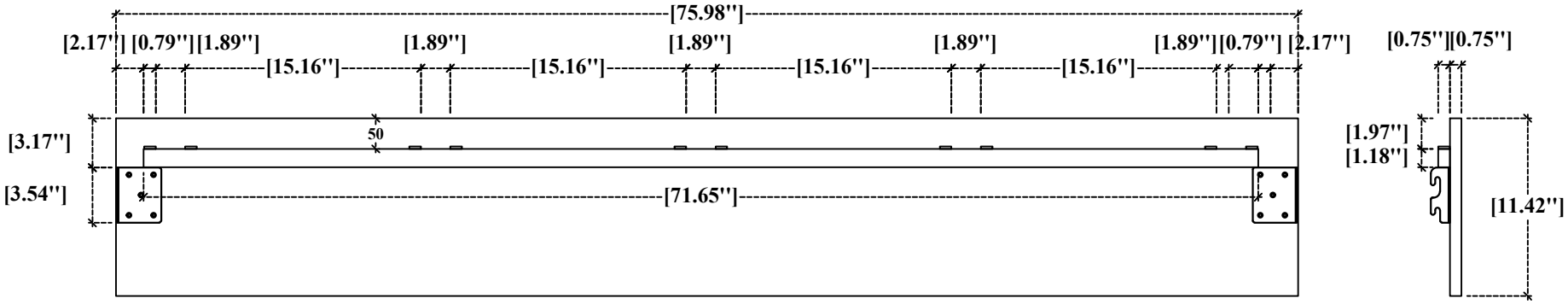
[75.98"]
[2.17"]
[0.79"]
[1.89"]
[15.16"]
[1.89"]
[15.16"]
[1.89"]
[15.16"]
[1.89"]
[15.16"]
[1.89"]
[0.79"]
[2.17"]
[0.75"]
[0.75"]
[3.17"]
50
[3.54"]
[71.65"]
[1.97"]
[1.18"]
[11.42"]

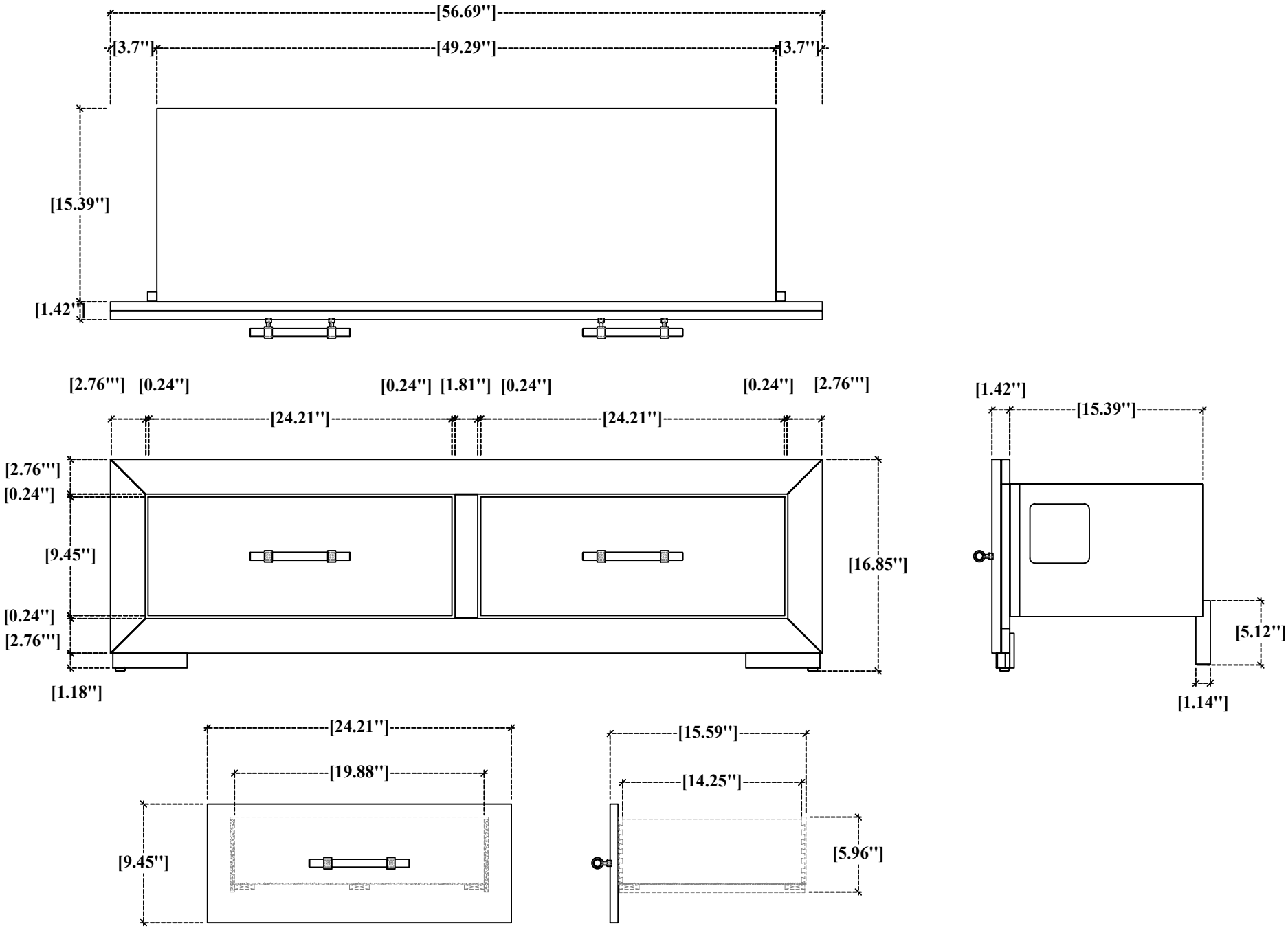
[56.69"]
[3.7"]
[49.29"]
[3.7"]
[15.39"]
[1.42"]
[2.76"'] [0.24"]
[0.24"] [1.81"] [0.24"]
[0.24"] [2.76"']
[24.21"]
[24.21"]
[2.76"']
[0.24"]
[9.45"]
[0.24"]
[2.76"']
[1.18"]
[16.85"]
[1.42"]
[15.39"]
[5.12"]
[1.14"]
[24.21"]
[19.88"]
[9.45"]
[15.59"]
[14.25"]
[5.96"]

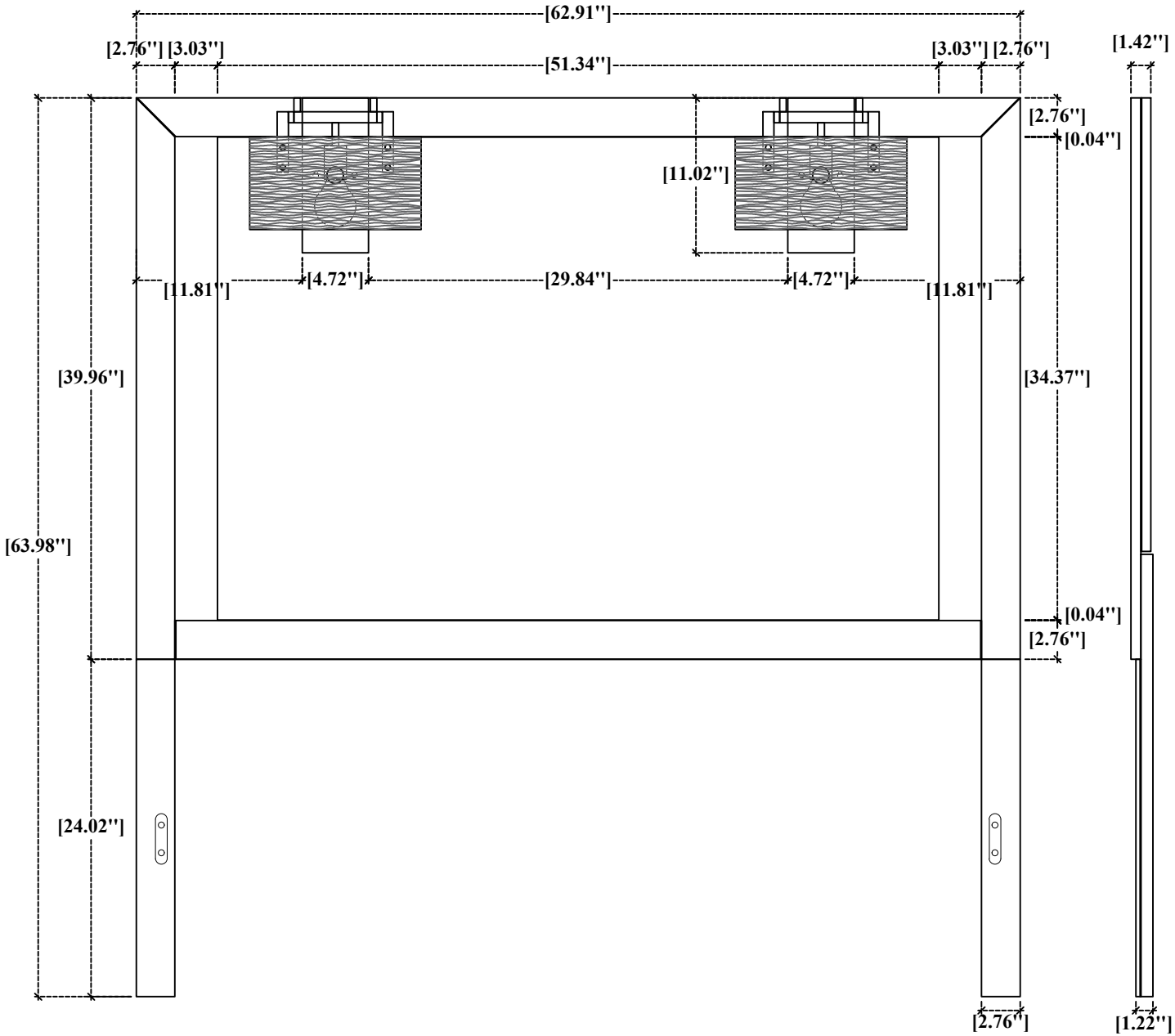
[62.91"]
[2.76"] [3.03"]
[51.34"]
[3.03"] [2.76"]
[1.42"]
[2.76"]
[0.04"]
[11.02"]
[11.81"]
[4.72"]
[29.84"]
[4.72"]
[11.81"]
[39.96"]
[34.37"]
[63.98"]
[0.04"]
[2.76"]
[24.02"]
[2.76"]
[1.22"]

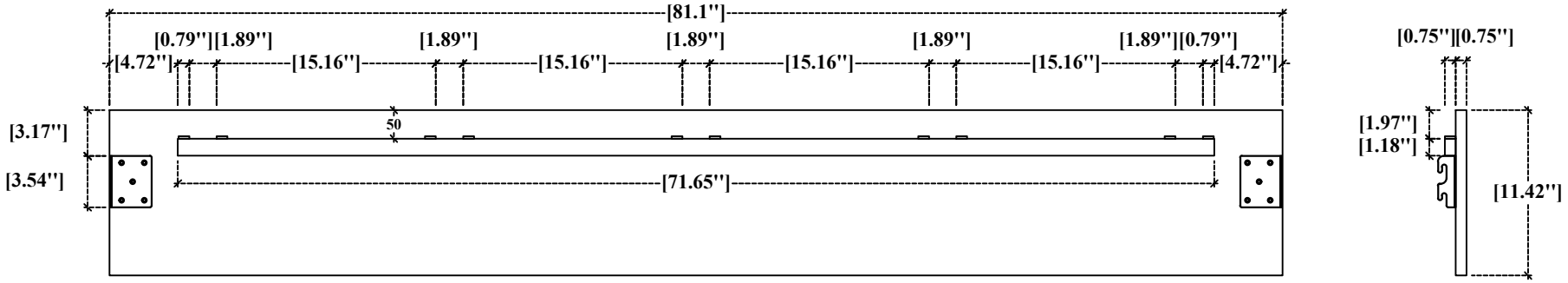
[81.1'']
[0.79''][1.89''
[1.89'']
[1.89'']
[1.89'']
[1.89''][0.79'']
[4.72'']
[15.16'']
[15.16'']
[15.16'']
[15.16'']
[4.72'']
[3.17'']
50
[3.54'']
[71.65'']
[0.75''][0.75'']
[1.97'']
[1.18'']
[11.42'']

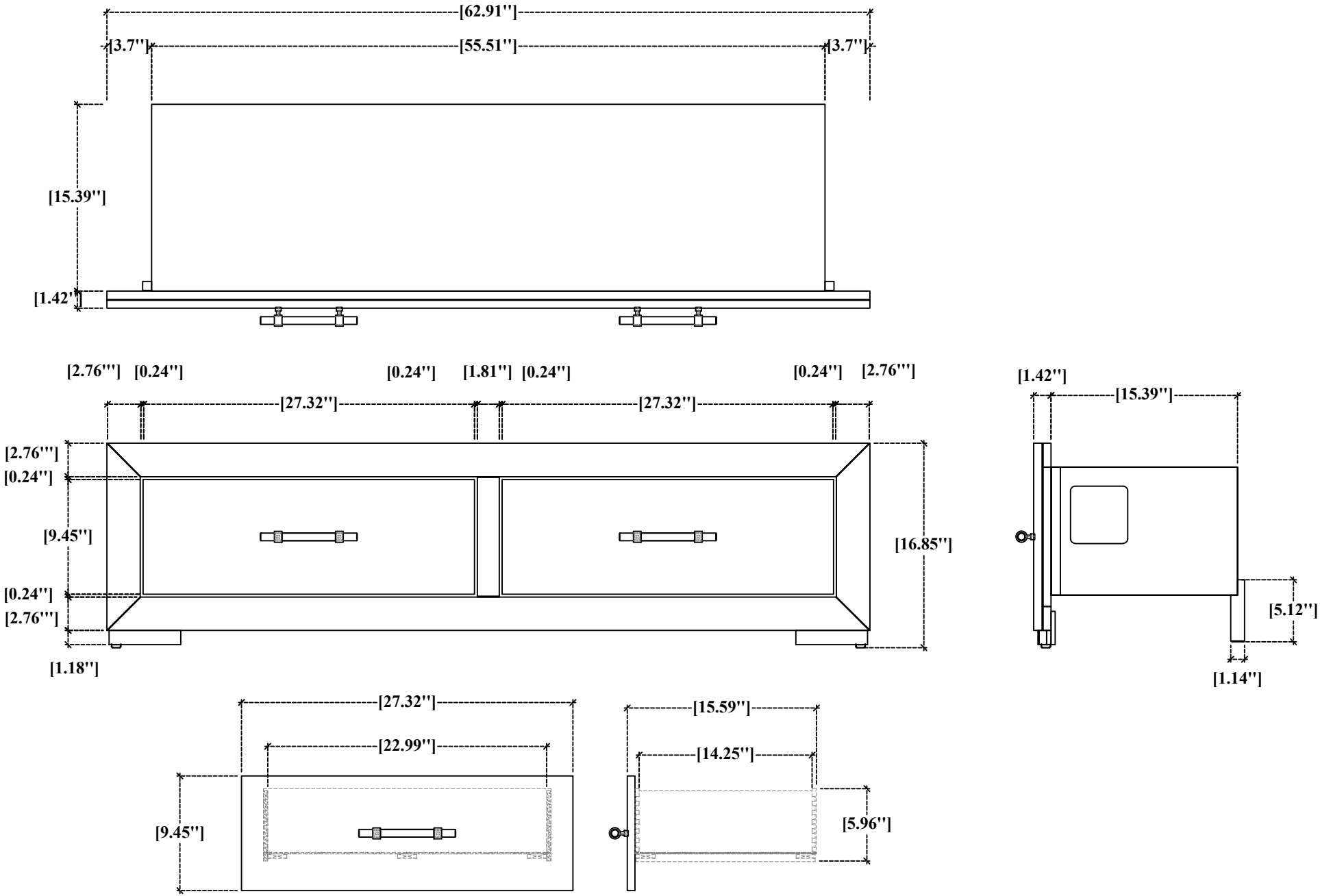
[62.91"]
[3.7"]
[55.51"]
[3.7"]
[15.39"]
[1.42"]
[2.76"'] [0.24"]
[0.24"] [1.81"] [0.24"]
[0.24"] [2.76"']
[27.32"]
[27.32"]
[2.76"']
[0.24"]
[9.45"]
[0.24"]
[2.76"']
[1.18"]
[16.85"]
[1.42"]
[15.39"]
[5.12"]
[1.14"]
[27.32"]
[22.99"]
[9.45"]
[15.59"]
[14.25"]
[5.96"]

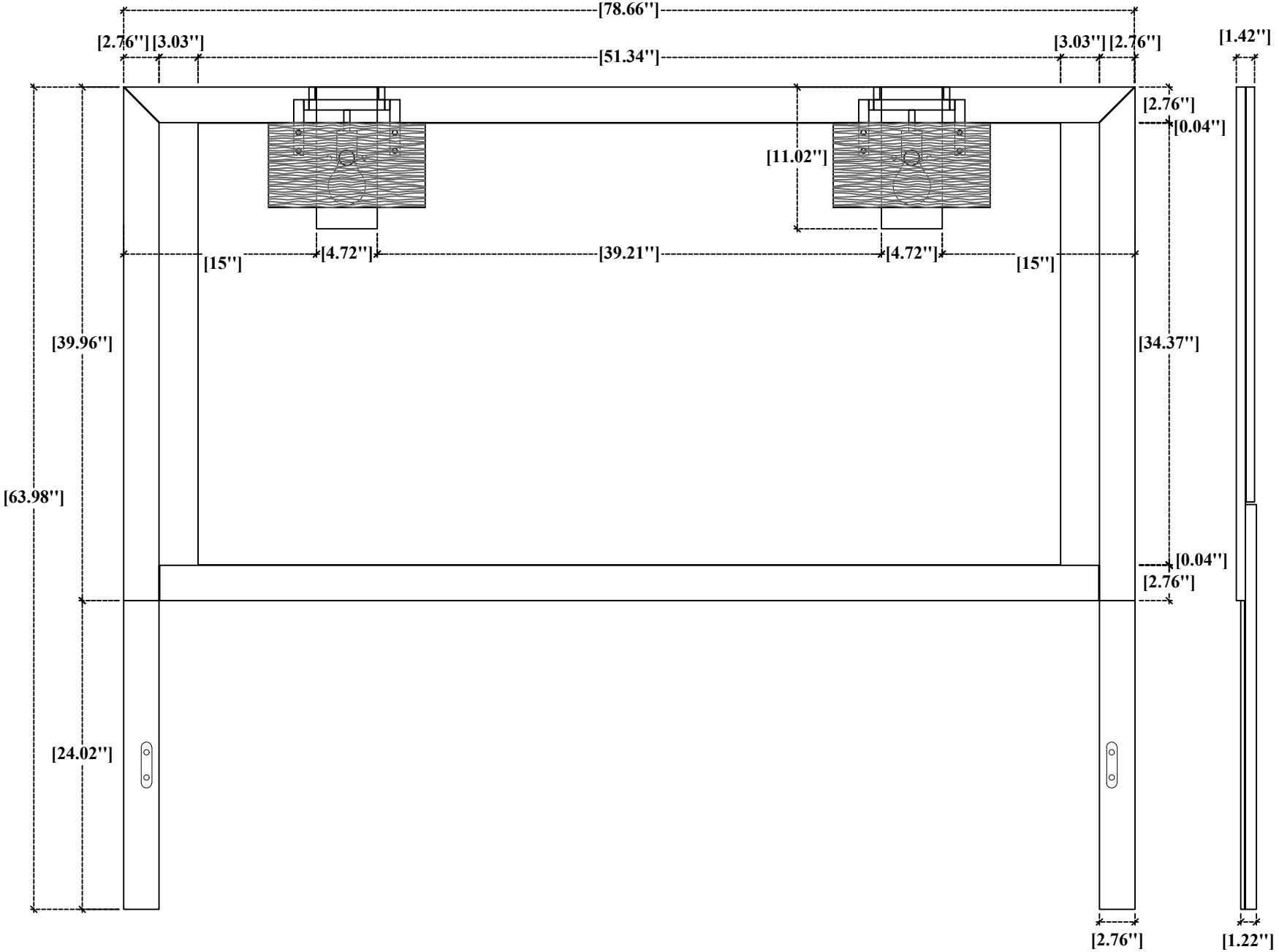
[78.66"]
[2.76"]
[3.03"]
[51.34"]
[3.03"]
[2.76"]
[1.42"]
[2.76"]
[0.04"]
[11.02"]
[15"]
[4.72"]
[39.21"]
[4.72"]
[15"]
[39.96"]
[34.37"]
[63.98"]
[0.04"]
[2.76"]
[24.02"]
[2.76"]
[1.22"]

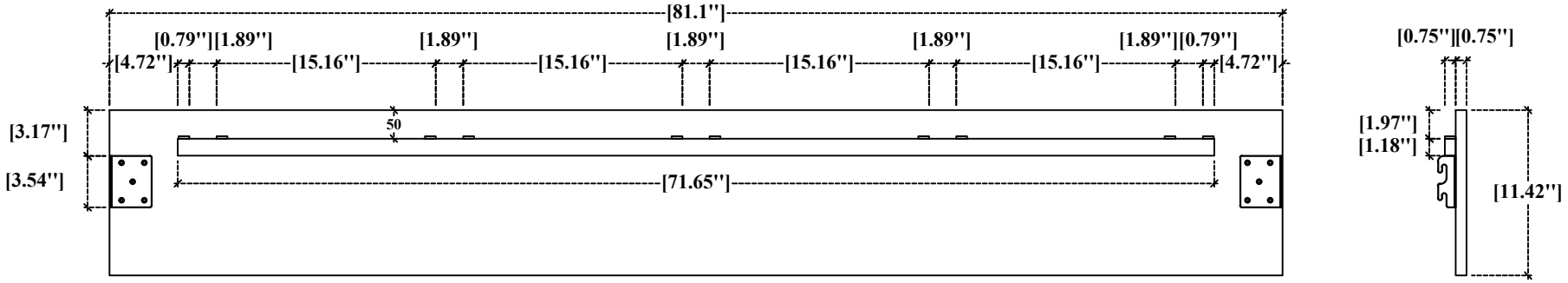
[81.1'']
[0.79''][1.89''
[1.89'']
[1.89'']
[1.89'']
[1.89''][0.79'']
[4.72'']
[15.16'']
[15.16'']
[15.16'']
[15.16'']
[4.72'']
[3.17'']
50
[3.54'']
[71.65'']
[0.75''][0.75'']
[1.97'']
[1.18'']
[11.42'']

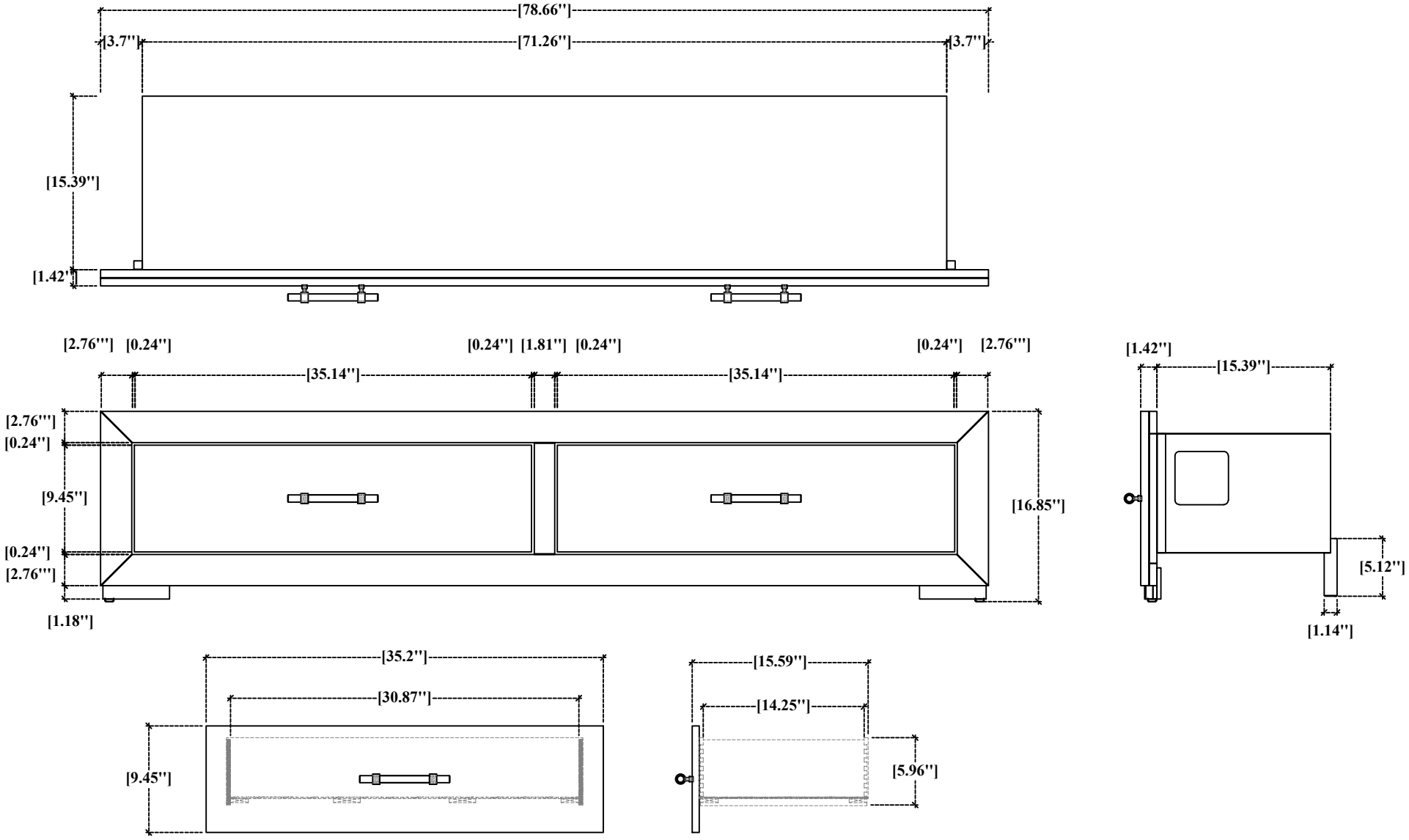
[78.66"]
[3.7"]
[71.26"]
[3.7"]
[15.39"]
[1.42"]
[2.76"'] [0.24"]
[0.24"] [1.81"] [0.24"]
[0.24"] [2.76"']
[35.14"]
[35.14"]
[2.76"']
[0.24"]
[9.45"]
[0.24"]
[2.76"']
[1.18"]
[16.85"]
[1.42"]
[15.39"]
[5.12"]
[1.14"]
[35.2"]
[30.87"]
[9.45"]
[15.59"]
[14.25"]
[5.96"]