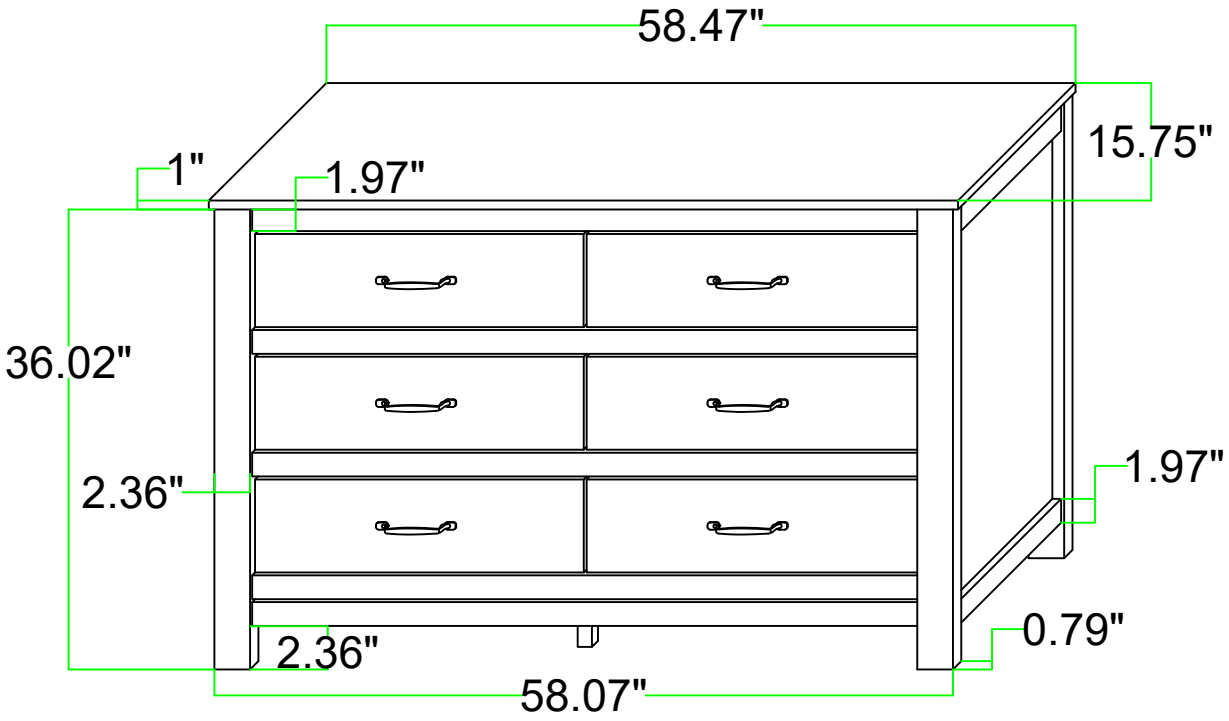
58.47"
15.75"
1"
1.97"
36.02"
2.36"
1.97"
0.79"
2.36"
58.07"

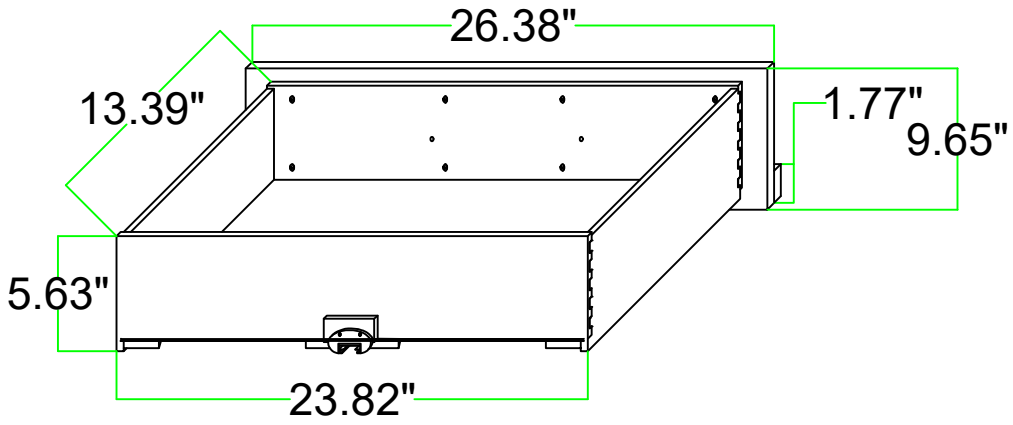
26.38"
13.39"
1.77"
9.65"
5.63"
23.82"