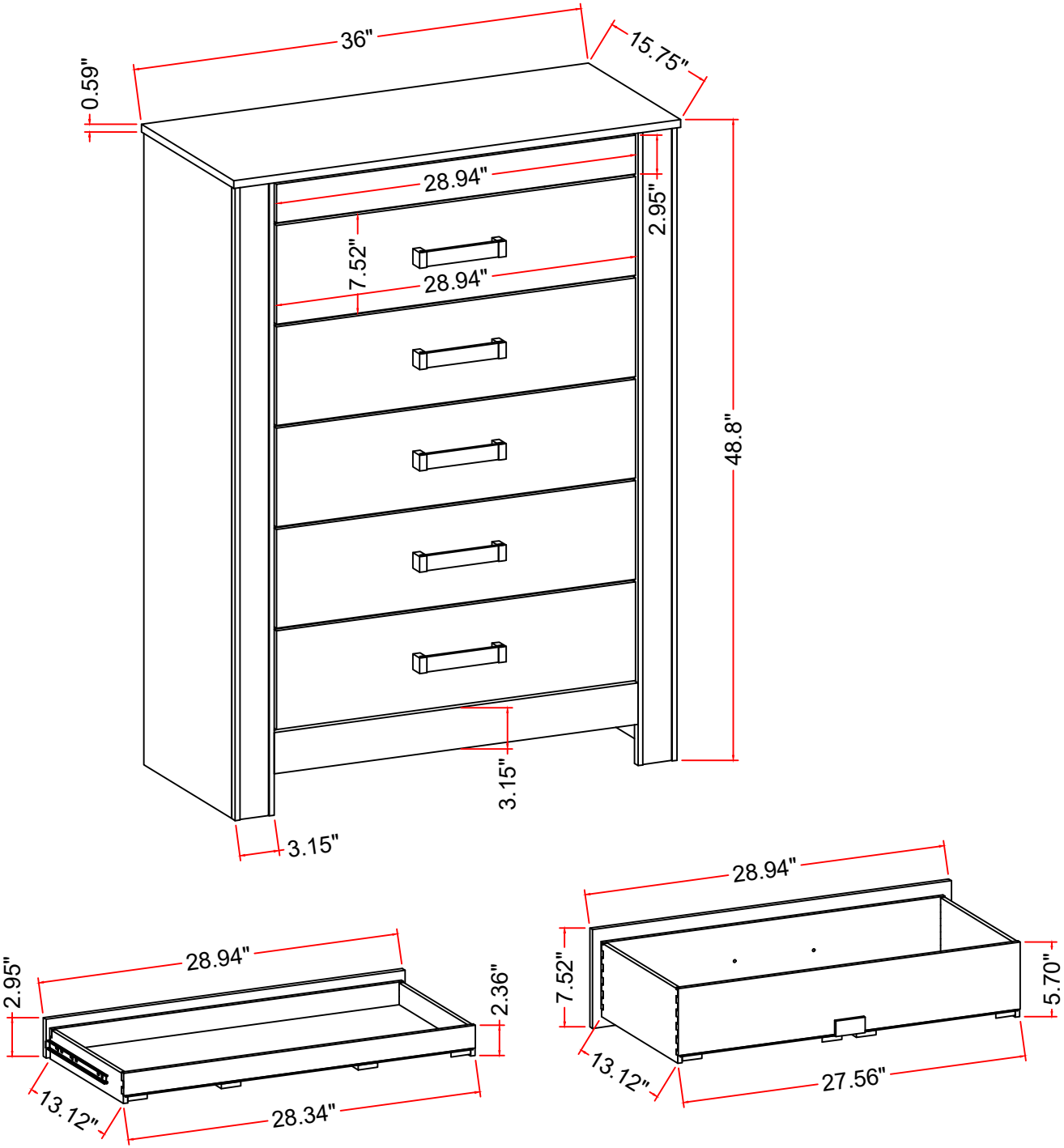
36"
15.75"
0.59"
28.94"
2.95"
7.52"
28.94"
48.8"
3.15"
3.15"
28.94"
2.95"
2.36"
13.12"
28.34"
28.94"
7.52"
5.70"
13.12"
27.56"